Effects of Using Hospital Information Systems on Nurses' Individual Performance: A Study on Influential Factors

Abbas SHEIKHTAHERI[a], Somayeh MALEKZADEH[b], Niyoosha-sadat HASHEMI[c] and Nasim HASHEMI[b,1]

[a] *Health Management and Economics Research Center, School of Health Management and Information Sciences, Iran University of Medical Sciences, Tehran, Iran*

[b] *Iranian Social Security Organization, Tehran, Iran*

[c] *Student, Islamic Azad University, Tehran North Branch, Tehran, Iran*

Abstract. We investigated the use of hospital information systems (HIS) among nurses and its effect on their individual performance. We combined UTAUT and Delone & McLean models and developed a questionaire and collected 173 questionaires from nurses. We found that effort expectancy, information quality, performance expectancy and system quality positively influence nurses' intention to use HIS. In addition, nurses' intention to use and facilitators conditions positively direct their actual use. Information quality, service quality and system quality significantly increase nurses' satisfaction with HIS. Lastly, nurses' satisfaction with HIS and their actual use positively improves their individual performance in working with HIS.

Keywords. hospital information system, influential factors, nurse, UTAUT, Delone and McLean model

1. Introduction

Today, the use of information technology in healthcare, especially in hospitals, has created a great potential for improving the quality of services and the efficiency and effectiveness of personnel as well as reducing organizational costs [1]. Since the use of health information technology has made some changes to data processing, some researchers believe that if hospitals do not adopt new information systems, they will fail and lose patients' trust. To this end, the hospital information system (HIS) has gradually replaced traditional methods [2]. One of the main goals of the hospital information system is to improve the quality of medical and therapeutic services.

[1] Corresponding Author: Nasim Hashemi, Iranian Social Security Organization, Tehran, Iran, E-Mail: hashemi.nasim@tamin.ir

Due to the increasing tendency of hospitals to set up these systems and the considerable budget that is spent on the implementation, collecting and analyzing health care providers' attitudes, motivations, and thinking about using HIS can be used as a predictive factor in determining the extent of HIS utilization in the process of patient care and treatment [3]. Nurses are one of the largest group of healthcare professionals in hospitals, dealing heavily with information systems when performing daily activities. Despite favorable attitudes, many nurses are skeptical about their day-to-day work when faced with problems and inadequacy of information tools and lack of satisfaction with the HIS resulting in unwillingness to use [4]. Therefore, understanding nurses' view as the largest group of healthcare providers in hospitals will be very effective. The aim of the this study was to explore the adoption of HIS among nurses and to investigate the effects of using HIS on nurses' individual performance based on the Unified Theory of Acceptance and Use of Technology (UTAUT) and Delone & McLean IS models.

2. Methods

To develop the primarily theoretical model and our hypotheses, we considered UTAUT adoption model [5] and Delone & McLean model [6]. According to the Delone & McLean model, the three factors information quality (IQ), service quality (SerQ) and system quality (SysQ) affect behavioral intention to use (BIuse) of an IS and user satisfaction (US) and then influence actual use (AUse) and result in benefits. We defined benefits as nurses' individual performance (IP). Furthermore, according to UTAUT, performance expectancy (PE), social influence (SI), and effort expectancy (EE) influence the intention to use and intention to use increase actual use. In addition, facilitator conditions (FC) may affect actual use. We combined these two models as primarily model (Figure 1).

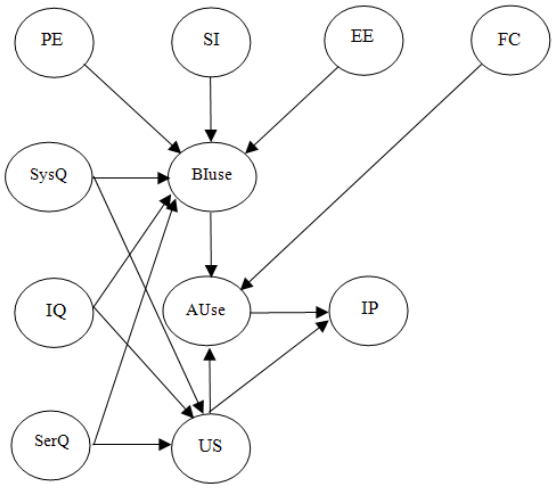

Figure 1. Our preliminary theoretical model

To develop a self-administrated questionnaire, we adopted relevant questions from previous studies applied these two models in healthcare settings. To evaluate the validity of the questions, the questionnaire was reviewed by a panel of four experts in health information technology and also five nurses and we made some modifications based on their comments. Final questionnaire included 38 questions for 11 constructs as follows IQ (4), SerQ (4), SysQ (4), US (3), EE (4), PE (3), SI(3), FC (3), BIuse (3), AUse (3), IP(4). The respondents were asked to express their answers on a 5-point Likert scale (1 = strongly disagree to 5 = strongly agree). 250 nurses who worked in hospitals affiliated to Iranian social security organization were invited to participate and finally 173 questionnaires were collected and analyzed. We used partial least squares-structural equation modeling (PLS-SEM) and SmartPLS v2 to analyze the data.

We used the methods and measures suggested by Hair et al. [7] to test measurement and structural models. To this end, we used factor loadings, Cronbach's alpha, composite reliability (CR) convergent and discriminant validity of the measurement model. We also tested the structural model using t-values, standardized coefficient Beta values and the coefficient of determination (R^2 value). The t-values larger than 1.96 (P-value ≤ 0.05) and 1.67 (P-value ≤ 0.10) were considered significant and marginally significant, respectively. We also used Cohen's f^2 to test the effect sizes of exogenous variables and Stone-Geisser criterion (Q^2) to test the power of the predictability of endogenous constructs [7, 8].

3. Results

Most of the respondents were females (68.2%) and 41.6% of them were between 35-44 years old (mean: 35.2, SD= 5), and all respondents had a bachelor's (50.3%) or Master's (31.8%) degrees. Among participants, 58% had ≥10 years of experience working in a hospital (mean= 11.5, SD= 5.2) and 46.8% had ≥ 5 years of experience working with an HIS (mean=5.3, SD=2.1).

As for the measurement model, we found that the loadings of only one question (SI1) was small (<0.4) and after deleting this question, the loadings of the other questions were 0.553 to 0.996 which are above the recommended 0.40 threshold [7] (Table 1).

Table 2 shows the results of the reliability of the questions. As is shown, Cronbach's alpha for all constructs are above 0.7 except for FC, AUse, SI and PE. After deleting questions Ause1 and FC2, Cronbach's alpha for these constructs had been increased (>0.7). According to suggested recommended 0.70 threshold [7], these values are acceptable. As for SI and PE, deleting any items did not increase the Cronbach's alpha. Therefore, we did not delete any items. The highest and lowest alphas are related to SI and IP, respectively. Composite reliability for all constructs is above recommended 0.7 and acceptable (range: 0.757 for PE and 0.949 for IP) [7,9].

We tested the convergent validity of the model, and found that all of the AVE values were larger than the recommended value of 0.5 (range: 0.519 for PE and .0832 for IP) [7]. These values confirm the reliability of the measurements. Table 2 also shows the mean of each construct. As can be seen, the mean of score is between 2.46 (intention to use) and 3.22 (performance expectancy).

We also considered the discriminant validity of the measurement model. To this end, the cross loading confirmed the discriminant validity of the questions (Table 1). Furthermore, we used Fornell and Larcker criterion [7]. As indicated in Table 3, the

AVE square roots were larger than the corresponding correlations, which indicates the discriminant validity of the model [7].

Table 1. PLS loadings and cross-loadings

Construct		AUse	EE	FC	IP	IQ	BIUse	PE	SI	SerQ	SysQ	US
AUse	AU2	**0.883**	0.500	0.392	0.399	0.488	0.362	0.448	0.540	0.375	0.211	0.253
	AU3	**0.904**	0.593	0.153	0.507	0.505	0.448	0.517	0.555	0.301	0.344	0.391
EE	EE1	0.443	**0.894**	0.431	0.762	0.630	0.638	0.725	0.412	0.600	0.606	0.767
	EE2	0.498	**0.889**	0.424	0.682	0.575	0.706	0.695	0.535	0.624	0.571	0.764
	EE3	0.592	**0.884**	0.372	0.784	0.618	0.650	0.736	0.488	0.563	0.563	0.753
	EE4	0.640	**0.862**	0.334	0.615	0.673	0.610	0.574	0.518	0.538	0.492	0.699
Fa	Fa2	0.195	0.212	**0.535**	0.332	0.292	0.041	0.564	0.343	0.515	0.176	0.061
	Fa3	0.293	0.444	**0.996**	0.518	0.408	0.386	0.581	0.490	0.584	0.465	0.476
IP	IP1	0.478	0.696	0.462	**0.919**	0.627	0.513	0.759	0.510	0.518	0.673	0.666
	IP2	0.388	0.710	0.436	**0.890**	0.633	0.517	0.817	0.513	0.566	0.734	0.702
	IP3	0.473	0.748	0.505	**0.878**	0.634	0.565	0.739	0.494	0.647	0.629	0.656
	IP4	0.495	0.767	0.499	**0.938**	0.623	0.605	0.792	0.533	0.548	0.705	0.724
IQ	IQ1	0.565	0.640	0.310	0.570	**0.869**	0.410	0.547	0.501	0.623	0.566	0.583
	IQ2	0.452	0.511	0.149	0.520	**0.794**	0.270	0.347	0.314	0.459	0.503	0.458
	IQ3	0.348	0.411	0.419	0.441	**0.680**	0.303	0.403	0.280	0.615	0.428	0.296
	IQ4	0.358	0.623	0.475	0.640	**0.802**	0.496	0.553	0.375	0.700	0.676	0.608
BIUse	IU1	0.425	0.685	0.496	0.631	0.508	**0.900**	0.578	0.513	0.484	0.555	0.698
	IU2	0.385	0.656	0.234	0.498	0.350	**0.867**	0.428	0.216	0.317	0.493	0.616
	IU3	0.296	0.445	0.127	0.324	0.284	**0.670**	0.294	0.181	0.312	0.160	0.418
PE	PE1	0.584	0.568	0.241	0.650	0.552	0.344	**0.721**	0.514	0.477	0.418	0.439
	PE2	0.357	0.379	0.534	0.427	0.341	0.219	**0.558**	0.505	0.528	0.343	0.250
	PE3	0.316	0.681	0.562	0.730	0.424	0.532	**0.865**	0.449	0.514	0.574	0.619
SI	SI2	0.471	0.442	0.391	0.394	0.325	0.359	0.469	**0.878**	0.296	0.051	0.515
	SI3	0.569	0.494	0.456	0.576	0.499	0.281	0.618	**0.790**	0.572	0.525	0.481
SQ	SerQ1	0.164	0.501	0.285	0.464	0.619	0.279	0.475	0.199	**0.707**	0.556	0.437
	SerQ2	0.494	0.484	0.420	0.413	0.620	0.327	0.449	0.452	**0.742**	0.371	0.407
	SerQ3	0.280	0.458	0.413	0.485	0.465	0.324	0.494	0.431	**0.745**	0.461	0.484
	SerQ4	0.154	0.553	0.695	0.537	0.570	0.445	0.607	0.381	0.817	0.489	0.535
SYSQ	SysQ1	0.147	0.449	0.452	0.652	0.539	0.425	0.593	0.127	0.544	**0.813**	0.410
	SysQ2	0.248	0.472	0.504	0.707	0.547	0.420	0.638	0.265	0.569	**0.848**	0.479
	SysQ3	0.325	0.564	0.250	0.549	0.592	0.409	0.423	0.334	0.465	**0.823**	0.597
	SysQ4	0.295	0.613	0.393	0.658	0.647	0.500	0.534	0.270	0.515	**0.886**	0.588
US	US1	0.180	0.729	0.472	0.691	0.594	0.665	0.619	0.488	0.647	0.617	**0.898**
	US2	0.251	0.692	0.515	0.670	0.501	0.601	0.655	0.533	0.556	0.576	**0.863**
	US3	0.505	0.724	0.165	0.553	0.515	0.554	0.360	0.490	0.350	0.395	**0.772**

Table 2. Mean, AVE, Cronbach's alpha (CA), and composite reliability (CR) of constructs

Constructs	Mean (SD)	CR >0.7	CA >0.7	AVE>0.5
AUse	2.97 ± 1.45	0.888	0.749	0.799
EE	2.69 ± 1.32	0.934	0.905	0.778
FC	3.14 ± 1.26	0.838	0.627	0.722
IP	2.67 ± 1.31	0.949	0.928	0.823
IQ	3.06 ± 0.85	0.867	0.799	0.621
BIUse	2.46 ± 1.21	0.857	0.750	0.670
PE	3.22 ± 1.01	0.757	0.676	0.519
SI	2.69 ± 1.17	0.821	0.643	0.697
SerQ	3.19 ± 0.82	0.841	0.747	0.570
SysQ	2.71 ± 1.05	0.909	0.867	0.714
US	2.67 ± 1.26	0.882	0.798	0.716

As shown in Table 4, three hypotheses were not supported. One of the hypotheses (PE → BIUse) was marginally supported and the other hypotheses were statistically supported ($P < 0.05$). The impact of effort expectancy on intention to use was the strongest relation (B = 0.831, t-value = 13.206), followed by the impact of user satisfaction on individual performance (B = 0.662, t-value = 12.511) and the impact of intention to use on actual use (B= 0.404, t-value = 5.365).

As indicated, effort expectancy, information quality, performance expectancy and system quality positively influence on nurses' intention use of HIS. In addition to nurses' intention use, facilitation conditions positively direct the actual use. Information quality, service quality and system quality significantly increase nurses' satisfaction with HIS. Lastly, nurses' satisfaction with HIS and their actual use positively improves their individual performance in working with HIS. Furthermore, the effect sizes indicate that user satisfaction, effort expectancy, intention to use and actual use are the exogenous variables with considerable effects in the theoretical model.

Table 3. Correlations and AVE square roots of the constructs

Construct	AUse	EE	FC	IP	IQ	BIUse	PE	SI	SerQ	SysQ	US
AUse	**0.894**										
EE	0.614	**0.882**									
FC	0.294	0.409	**0.849**								
IP	0.507	0.805	0.516	**0.907**							
IQ	0.546	0.709	0.435	0.700	**0.788**						
BIUse	0.456	0.741	0.288	0.608	0.486	**0.818**					
PE	0.541	0.775	0.668	0.856	0.601	0.545	**0.720**				
SI	0.613	0.555	0.502	0.567	0.479	0.386	0.638	**0.835**			
SerQ	0.346	0.661	0.662	0.632	0.757	0.461	0.676	0.487	**0.755**		
SysQ	0.308	0.629	0.417	0.759	0.703	0.525	0.641	0.304	0.622	**0.845**	
US	0.357	0.843	0.369	0.759	0.642	0.720	0.653	0.595	0.625	0.626	**0.846**

The bold numbers indicate AVE square roots.

Table 4. Results of hypothesis tests and effect sizes

Path	ß	*t*-value	Result	f^2	category
AUse → IP	0.270	4.303	Supported	0.177	Moderate
EE → BIUse	0.831	13.206	Supported	0.465	Strong
FC → AUse	0.177	2.180	Supported	0.032	Small
IQ → BIUse	0.186	2.292	Supported	0.025	Small
IQ →US	0.234	3.256	Supported	0.032	Small
BIUse → AUse	0.404	5.365	Supported	0.137	Moderate
PE → BIUse	0.161	1.887	Supported	0.016	Small
SI → BIUse	0.050	1.114	Non-supported	0.004	NS
SerQ → BIUse	-0.002	0.033	Non-supported	0.000	NS
SerQ → US	0.263	4.000	Supported	0.058	Small
SysQ → BIUse	0.223	3.797	Supported	0.048	Small
SysQ → US	0.297	4.032	Supported	0.088	Small
US → AUse	0.001	0.011	Non-supported	0.036	NS
US →IP	0.662	12.511	Supported	1.045	Strong

Table 5. Model fitness criteria

Endogenous variables	R2	Category	Q2	Category
Actual Use	0.236	Moderate	0.158	Moderate
Behavioural Intention to Use	0.573	Moderate	0.387	Strong
User Satisfaction	0.501	Moderate	0.348	Strong
Individual Performance	0.640	Strong	0.502	Strong

Table 5 highlights that individual performance and intention to use has the highest R^2 indicating that these variables explain 64% and 57% of the variation of these variables. Finally, the goodness of fit the model was 58.2%. The final model is depicted in Figure 2.

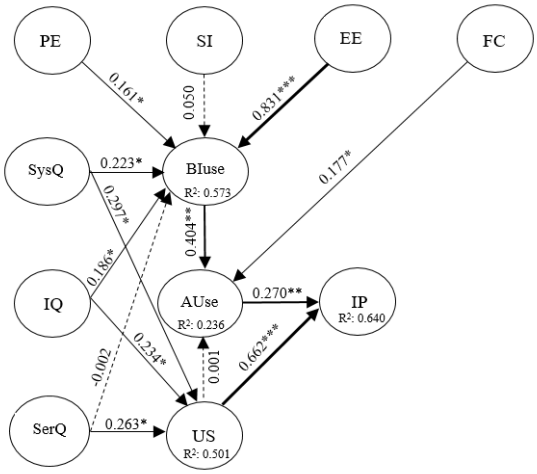

Figure 2. Final model

4. Discussion

This study aimed to realize the influential factors that effects on using hospital information systems and nurses' individual performance. We found that performance expectancy and effort expectancy were the influential factors for behavioral intention to use. This result is aligned with the result of Esmaeilzadeh et al. [10] and Kijsanayotin et al. [11] that their studies were on the factors that influenced on the intention to use. They also found that performance expectancy (PE) [10, 11] and effort expectancy (EE) [11] influenced the intention to use of medical information technologies.

Other findings of this study showed that intention to use and facilitating conditions have a positive impact on the actual use. This is inline with the finding of Kim et al. that analyze the factors influencing healthcare professionals' adoption of mobile electronic medical record (EMR)[12]. They found that facilitating conditions, and the intention to use of a system positively influenced the usage of health information technologies in the Community Health Centers. Therefore, we can conclude that intentions to use of an HIS can lead to the actual use of the HIS.

Furthermore, we found that facilitating conditions have a significant influence on the actual use of HIS by nurses and the nurses' satisfaction with an HIS in turn improves their performance. Heselmans et al. [13] also used the UTAUT model to confirm the factors that influence on the usage of EMRs and their results are correlated with our findings. They reported that facilitating conditions, and satisfaction have positively influenced on the intention to use. It means that if nurse's experience of using a technology is accompanying with satisfaction, the use of technology will be continued. Our study showed that social influence had weak correlations with the intention to use. Although some studies have different findings, our finding in this regard is similar to the result of Heselmans's study [13] that showed weak correlations among this factor and the intention to use.

There are some limitations in this study worthy of consideration. First, Although the sample size is enough to conduct PLS analysis, participation of more nurses may provide more meaningful information. Second, scope of this study limited to the nurses worked in hospitals affiliated with social security organization. Therefore, the results may not be generalizable to other settings.

In summary, this study indicates the important factors including perceived efforts to use the system, facilitators that mangers may provide for nurses, perceived better performance after using an HIS, information quality of an HIS, service quality and the quality of HIS may have positive impact on use of HIS and nurses' individual performance directly or indirectly.

References

[1] VP. Aggelidis, PD. Chatzoglou. Using a modified technology acceptance model in hospitals. *Int J Med Inform* **78**(2009): 115-26.

[2] M. Langarizadeh, M. Gohari, A. Koohestani. Acceptance of hospital information system among medical records users based on technology acceptance model. *Health Inf Manage* **10** (2014): 809.

[3] E. Mehraeen, R. Safdari, M. Ghazi Saeedi. The security challenges of hospital information system. *Indian J Appl Res* **5** (2015): 312-14.

[4] R. Sadeghi, F. Yaghmayi. Informatics applying in nursing; education: research and care. *Iran Q Educ Strategies* **5**(2012): 199-206.

[5] H. Khechine, S. Lakhal, P. Ndjambou A meta-analysis of the UTAUT model: Eleven years later. *Canadian Journal of Administrative Sciences* (2016).

[6] WH. Delone, ER. McLean. The DeLone and McLean model of information systems success: a ten-year update .*J Manage Inform Syst*. **19** (2003):9–30.

[7] J.F Hair, M.Sarstedt. Advanced issues in partial least squares structural equation modeling; Sage Publications: Thousand Oaks, CA, USA, 2017.

[8] J. Cohen, The effect size index: D. Statist. *Power Anal Behave Sci* 2 (1988): 284–288.

[9] K. Tran, D. Morra, V. Lo. Medical students and personal smartphones in the clinical environment: the impact on confidentiality of personal health information and professionalism, *Journal of Medical Internet Researc*h 16 (2014), e132-e132.

[10] P. Esmaeilzadeh, M. Sambasivan, N. Kumar, H. Nezakati. Adoption of clinical decision support systems in a developing country: Antecedents and outcomes of physician's threat to perceived professional autonomy, *International journal of medical informatics* 84(2015):548-60.

[11] B. Kijsanayotin, S. Pannarunothai, SM. Speedie. Factors influencing health information technology adoption in Thailand's community health centers: applying the UTAUT model. *Int J Med Inform.* 78(2009):404–16.

[12] S. Kim, KH. Lee, H. Hwang, S. Yoo. Analysis of the factors influencing healthcare professionals' adoption of mobile electronic medical record (EMR) using the unified theory of acceptance and use of technology (UTAUT) in a tertiary hospital. *BMC Medical Informatics and Decision Making* 16(2016): 12.

[13] A. Heselmans, B. Aertgeerts, P. Donceel, S. Geens, S. Van de Velde, D. Ramaekers. Family physicians' perceptions and use of electronic clinical decision support during the first year of implementation. *J Med Syst.* 36(2012):3677–84.