Modeling External Stimulation of Excitable Cells Using a Novel Light-Activated Organic Semiconductor Technology

Sara STOPPACHER [a,1], Susanne SCHERUEBEL[b], Muammer ÜÇAL[c], Karin KORNMÜLLER[b], Eric GŁOWACKI[d], Rainer SCHINDL[b], Niroj SHRESTHA[b], Tony SCHMIDT[b], Christian BAUMGARTNER[a] and Theresa RIENMÜLLER[a]

[a] *Institute of Health Care Engineering with European Testing Center of Medical Devices, Graz University of Technology, Graz, Austria*

[b] *Gottfried Schatz Research Center (for Cell Signaling, Metabolism and Aging) Division of Biophysics, Medical University of Graz, Graz, Austria*

[c] *Department of Neurosurgery, Medical University of Graz, Graz, Austria*

[d] *Laboratory of Organic Electronics, Linköping University, Linköping, Sweden*

Abstract. Optoelectronic neurostimulation is a promising, minimally invasive treatment modality for neuronal damage, in particular for patients with traumatic brain injury. In this work, a newly developed optoelectronic device, a so-called photocap, based on light-activated organic semiconductor structures with high spatial and temporal resolution is investigated. To prove and verify the feasibility of this new technology, a mathematical model was developed, simulating the electrical response of excitable cells to photocap stimulation. In the first step, a comprehensive technical review of the device concept was performed, building the basis for setting up the simulation model. The simulations demonstrate that photocaps may serve as a stimulation device, triggering action potentials in neural or cardiac cells. Our first results show that the model serves as a perfect tool for evaluating and further developing this new technology, showing high potential for introducing new and innovative therapy methods in the field of optoelectronic cell stimulation.

Keywords. optoelectronic stimulation, model simulation, excitable cells, traumatic brain injury

1. Introduction

1.1. Background

Traumatic brain injury (TBI) is one of the leading causes of death among children and young adults, and is one of the most common causes of permanent disability [1]. Several years of TBI research has mainly focused on attenuation of secondary damage mechanisms in an attempt to stop lesion progression and to prevent further loss of neuronal cells. To alleviate functional deficits and restore functionality, physiotherapy is a long-lasting therapeutic modality in the daily clinical practice which unfortunately

[1] Corresponding Author: Sara Stoppacher, Institute of Health Care Engineering with European Testing Center of Medical Devices, Graz University of Technology, Stremayrgasse 16/II, 8010 Graz, Austria, E-Mail: stoppacher@tugraz.at

often reaches the limit of its possibilities. Recent advances in the understanding of neural connectivity brought exogenous neuronal stimulation into focus as an alternative way to induce plasticity and neuromodulation for functional recovery [2]. Existing stimulation methods, like transcranial magnetic stimulation (TMS) and direct cortical stimulation (DCS), may lead to long term effects [3-5]. Nevertheless, existing methods, either suffer from a low spatial or temporal resolution, are highly invasive or are based on genetic modifications [6].

In this work, an alternative, minimally invasive light-driven therapy method offering high spatial resolution was investigated in more detail, in view of the overall aim to improve regeneration of neuronal tissue after TBI and restore connectivity and functionality in damaged tissue [7]. The new optoelectronic device, a so-called photocap, developed by Eric D. Głowacki and his research team [8][9], is an organic photocapacitor that can convert light pulses into capacitive currents. In our research, we provide a mathematical simulation model to show that these devices are capable of triggering action potentials in excitable cells in response to light stimuli [10]. In the first part, the functionality of the photocaps is assessed, characterizing the electrical photoresponse (EPR) (see [9]) and measuring the electric field potential arising in the electrolyte on top of the stimulation device. The results of these measurements further serve as a basis for the development of a mathematical simulation model.

2. Methods

Photocaps are optoelectronic devices, showing similar functionality to solar cells. They are composed of different layers (see Figure 1), whose interaction is ultimately responsible for the unique mode of action. This structure consists of a base plate made of glass, covered with a transparent conductive layer formed by Indium tin oxide (ITO), which forms the back electrode of the device. The core is formed by an organic PN junction, which is composed of different organic molecular materials (PTCDI n-layer, H_2Pc p-layer) and is responsible for the conversion of light impulses into biphasic stimulation currents.[9]

The characterization of the functionality of the photocaps is one of the most essential and comprehensive tasks in this work, since a better understanding of the working and operating principles of the device is essential to improve their ability to precisely induce action potentials in excitable cells [11][12].

2.1. Preparation

Glass pipettes (raw glass tubulars 30-0068 Glass capillaries GC150TF-7.5) are pulled (HSE – Mikroelektroden – Ziehgerät DC, HUGO Sachs Elektronik) and filled with 3 M KCl, measuring electrodes are coated with Ag/AgCl before each new series of measurements. The PEDOT:PSS layer, which is used to increase the capacitance of the photocaps, is pre-treated by placing the photocaps in 3 M KCl solution for about 10 minutes before each measuring cycle in order to accumulate and achieve effective measuring results.

2.2. Functional characterization

For technical evaluation, two different measuring methods were investigated: the electrical photoresponse measurement (EPR) (see Figure 1) and the electric field potential measurement. While the first one was carried out to provide information about the maximum photovoltage, the latter method was used for characterizing the electric field propagation in an electrolytically conductive bath (see inset of Figure 1). These signals propagating in a bath are of big interest as they give an approximate idea of the signal experienced at the cell membrane.

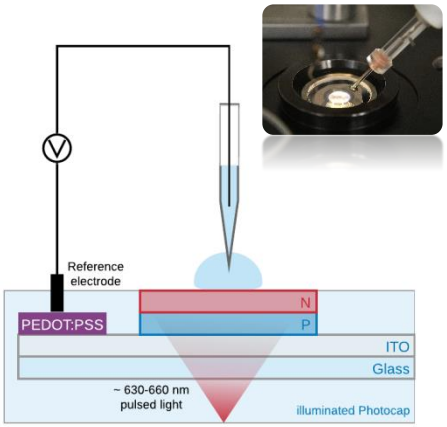

Figure 1. Schematic representation of an EPR measurement setup by using an electrolyte drop; inset shows an electric field distribution measurement

Voltage signals are in any case measured between a measuring electrode and a reference electrode. Depending on the type of measurement, the position of the reference electrode is either directly connected to the back electrode of the photocap or located in the conductive bath. An LED is located directly underneath the photocap, mounted on an objective which can be adjusted in height. It emits monophasic rectangular light pulses in a wavelength range of 630 nm – 660 nm.

Electrical field potential distribution. When measuring the electric field distribution, photocaps (13 mm ∅ organic pixel) were floated using 1 ml of 3 M KCl solution. The measuring pipette started at about cell-height, a few micrometers away from the PN layer and was then moved in different x-y-z-positions. The reference electrode was located in the bath. The pipette positioning was controlled using a motorized micromanipulator. A patch clamp system was used for this analysis (Axopatch 200B and Axon Digidata 1550), where the system was operated in the current clamp mode when current injection was zero.

2.3. Implementation of the simulation model

The interaction of photocaps and excitable cells is modeled using an equivalent circuit parameterized based on the results obtained from the EPR and field potential

measurements. The modeling structure, shown in Figure 2, consists of two parts: a Randles circuit [13] describing the behavior of the photocap as measured by electrochemical impedance spectroscopy (EIS) and a two-domain system (TDS) [14][15]. The part of the cell membrane grown on the photocap was modelled as attached cell membrane size (A_J) and the remaining part of the membrane as free cell membrane size (A_M - A_J) in the electrolyte bath. By coupling these two parts, the behavior of the cell grown on the photocap can be represented in a realistic way. Furthermore, each part of the membrane of the excitable cell is described based on existing cell-type specific ion channel models [16][17][18][19]. The bath surrounding the photocap and the free cell membrane are set to ground potential.

The right box in Figure 2, shows the equivalent circuit of a cell in a simplified form. Parameters, such as cell conductivities (g_{JM} and g_{FM}), cell capacitances (C_M) as well as voltage potentials, V_FP (stimulation voltage) and Vm (membrane voltage) are considered for the cell's equivalent circuit description.

The equivalent circuit of the photocap represented in the left blue box in Figure 2 consists of the parameters R_{int} (internal device resistance), R_{CT} (the charge transfer resistance), R_S (the resistance between PN layer and electrolyte) and R_J (the sheet resistance), defining the gap between the photocap and the attached cell. The capacitive behavior is essentially described using C_{dl} (capacitance of the double layer) and the C_g (geometric capacitance).

PSpice was used for implementing the equivalent circuit description, while mathematical cell models, based on well-known cell models, were implemented in Matlab (R2018a (9.4.0.813654) and R2019b (9.7.0.1190202)).

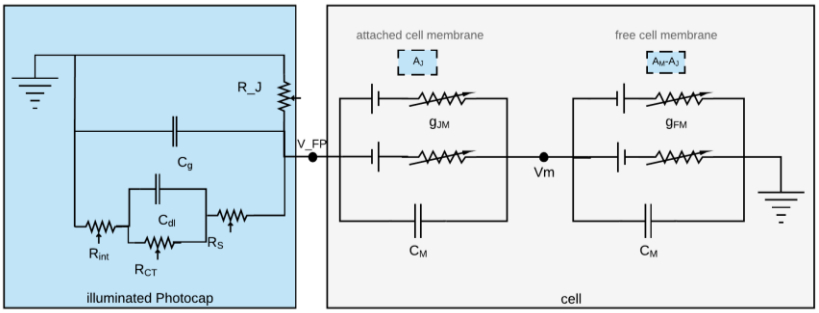

Figure 2. Electric equivalent circuit of an excitable cell stimulated through Photocaps

3. Results

3.1. Characterization of the photocaps

EPR. The EPR results show that photo responses in the range of -300 mV to -450 mV are achievable using the photocaps (see Figure 3). This specific organic semiconductor has a typical capacitive charging and discharging characteristic. The device also works precisely and reacts quickly to the switching of the LED.

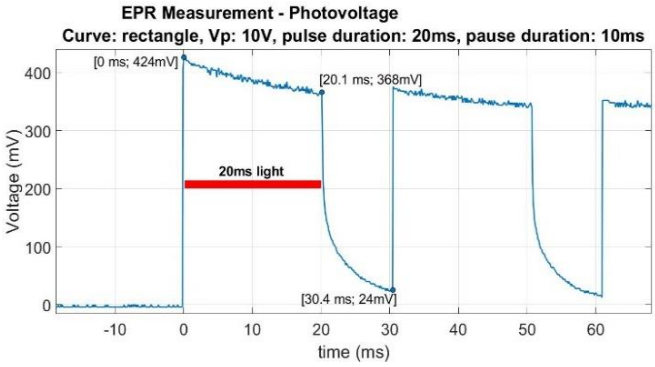

Figure 3. Photovoltage of an EPR measurement, with a 20 ms light - 10 ms pause duration

Electrical field potential distribution. Measured voltage values are much smaller compared to the maximal achievable voltage values as determined above, since the potential spreads across the entire electrolytic bath solution. Measured peaks of up to -58 mV (measured in the center of the PN-field, at about cell height) can be achieved as shown in Figure 4.

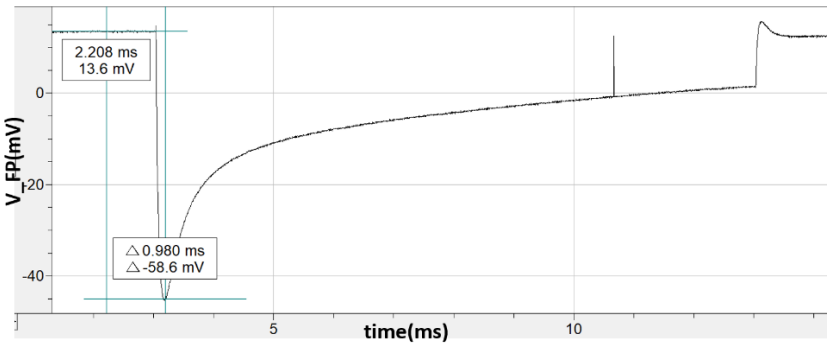

Figure 4. Transient voltage shape, showing the maximum measured voltage peak in an electrolytically conductive bath

3.2. Simulation model

In addition to physiological and geometrical cell properties, the model simulation also takes into account technical parameters such as the control of the LED and the light pulse duration. By defining all parameters using conditions given from practice, we aim to get a detailed picture of the stimulation of an excitable cell is obtained in the end.

For the mathematical description of the electrostatic field distribution, calculated with Laplace's equation according to Equation 1, an infinitely long conductor with a constant voltage level was assumed in the origin of the PN junction (shown in Figure 5).

$$\nabla^2 V = 0 \qquad (1)$$

This constant voltage level is described by the maximum voltage measured in the characterization phase (see Figure 4). The voltage potential distributes from the origin to the edges of the PN field [20].

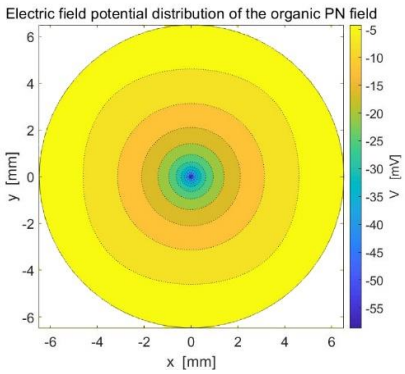

Figure 5. Electrostatic field distribution of the organic PN layer at about cell height

The resulting stimulation voltage obtained from the illuminated photocap in the simulation model is then converted into a stimulating current according to Equation 2, where $I_{\text{stimulation}}$ stands for the external stimulation current, C_{M} is the cell capacitance and V_{FP} is the stimulating voltage.

$$I_{\text{stimulation}} = C_{\text{M}} \cdot \frac{\mathrm{d}V_{FP}}{\mathrm{d}t} \qquad (2)$$

Thus, the resulting stimulation current is delivered to the virtual cell in the Matlab model. Figure 6A shows a resulting biphasic stimulation voltage (V_{FP}), while Figure 6B and Figure 6C represent the successful response of a cardiac and neuronal action potential stimulated by a photocap.

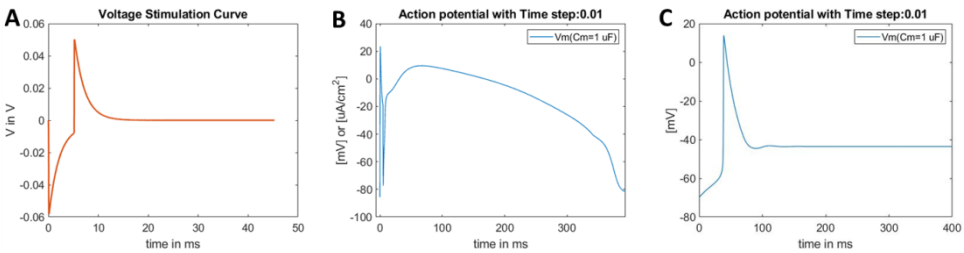

Figure 6. A Stimulation voltage signal created in an electrolytically conductive bath by a 20/10 ms light impulse, **B** Action potential generated in an excitable cardiac cell, **C** Action potential generated in an excitable neuronal cell

4. Discussion

In the present study, the electrophysiological response of excitable cells to external stimulation by a photocap, a new optoelectronic device, was investigated using a

simulation model. An analytical and graphical solution based on Laplace's equation was derived to calculate the electrostatic field distribution that a PN junction creates above the photocap in an electrolyte solution. The dynamics of the photovoltage emerging in response to light stimulation was modeled by an electrical equivalent circuit. All simulation results were compared and validated with results from comprehensive practical measurements. The Laplace simulation provides a good picture of the distribution of the electrostatic field potential.

The second part of the model describes the cell's response to external stimulation based on well-established cell models. This modular structure enables the user to investigate not only the coupled behavior of device and cell, but also to perform experiments focusing on photocap behavior or cell behavior alone. In addition, the model can easily be adapted to different cell types and cell dimensions. It provides information on the action potential, the currents involved in the cellular process and the corresponding gating variables. More importantly, the threshold level, which needs to be exceeded when stimulating a cell, can be determined in the simulation. By knowing a cell's threshold level, it can be quickly determined whether cells can be excited at a certain point on the PN field or not. Applying a TDS to model the cell membrane demonstrates the different effects on the attached and free cell membrane. The attached side depolarizes, while the free cell membrane hyperpolarizes in response to external field stimulation and vice versa.

In conclusion, the model offers the chance to gain new insights into the use of photocaps and the stimulation of cells in short time reducing the need for costly cell experiments. Different scenarios can be evaluated in silico and parameter sets modified in order to achieve a satisfying outcome. The modeling framework is based on rather simplified cell models, which may not always provide very detailed predictions of individual membrane currents, but provide sufficient information to know whether a cell can be excited or not. The work presented here will be the starting point to discover optimizations of the device and measurement setups and to check hypotheses regarding novel use cases.

In the present study we have shown that this new technology is a promising future opportunity for the treatment of disabilities due to the CNS injuries, such as TBI. After establishing and demonstrating the efficacy of photocaps in TBI, future work will focus on how to photocapacitors turn into implantable devices. Implants controlled by light from outside the body encouraging our nerves to regenerate are the path where the journey will take us.

Acknowledgements

This work was funded by the FWF Zukunftskolleg Program as part of the project "*LOGOS-TBI: Light-controlled Organic Semiconductor Implants for Regeneration after TBI"* (Project ID: ZK-17). Photocaps are fabricated in the lab of the LOGOS-TBI collaboration partner Dr. Głowacki (Linköping University, Sweden).

References

[1] Bazarian, J. J., Cernak, I., Noble-Haeusslein, L., Potolicchio, S. & Temkin, "Long-term neurologic outcomes after traumatic brain injury.", In: Journal of Head Trauma Rehabilitation 24 (November 1, 2009), pp. 439-451

[2] Bareket-Keren, L. & Hanein, Y., "Novel interfaces for light directed neuronal stimulation: advances and challenges.", In: Int J Nanomedicine 9 Suppl 1 (2014), pp. 65-83

[3] Fitzgerald, P. B., Fountain, S. & Daskalakis, Z. J., "A comprehensive review of the effects of rTMS on motor cortical excitability and inhibition", In: Clin Neurophysiol 117 (2006)., pp. 2584-2596.

[4] Kwon, T. G., Kim, Y. H., Chang, W. H., Bang, O. Y. & Shin, Y. I., "Effective method of combining rTMS and motor training in stroke patients", In: Restor Neurol Neurosci 32 (2014), pp. 223-232.

[5] Plautz, E. J., Barbay, S., Frost, S. B., Friel, K. M., Dancause, N., Zoubina, E. V., Stowe, A. M., Quaney, B. M. & Nudo, R. J. "Post-infarct cortical plasticity and behavioral recovery using concurrent cortical stimulation and rehabilitative training: a feasibility study in primates.", Neurol Res 25 (2003), pp. 801-810,

[6] Zhang, F., Gradinaru, V., Adamantidis, A. R., Durand, R., Airan, R. D., de Lecea, L. & Deisseroth, K., "Optogenetic interrogation of neural circuits: technology for probing mammalian brain structures", In: Nature Protocols volume 5 (2010), p. 439–456

[7] Scanziani, Massimo and Häusser, Michael, "Electrophysiology in the age of light", In: Nature (2019-10), p. 930-939

[8] David Rand et al. "Direct Electrical Neurostimulation with Organic Pigment Photocapacitors.", In: Advanced Materials 30.25 (June 2018), p. 1707292

[9] Marie Jakeˇsov´a et al. "Optoelectronic control of single cells using organic photocapacitors.", In: Science Advances 5.4 (Apr. 2019), eaav5265

[10] L. Tung and J.R. Borderies. "Analysis of electric field stimulation of single cardiac muscle cells.", In: Biophysical Journal 63.2 (Aug.1992), pp. 371–386.

[11] W. Krassowska and J.C. Neu. "Response of a single cell to an external electric field.", In: Biophysical Journal 66.6 (June 1994), pp. 1768–1776.

[12] Abdullaeva, Oliya S. and Balzer, Frank and Schulz, Matthias and Parisi, Jürgen and Lützen, Arne and Dedek, Karin and Schiek, Manuela, "Organic Photovoltaic Sensors for Photocapacitive Stimulation of Voltage‐Gated Ion Channels in Neuroblastoma Cells", In: Advanced Functional Materials (2019-05), 1805177

[13] Narendran Sekar Ramaraja P Ramasamy, "Electrochemical Impedance Spectroscopy for Microbial Fuel Cell Characterization.", In: Journal of Microbial & Biochemical Technology (2013), p. 28

[14] Sarker, Subrata and Ahammad, A. J. Saleh and Seo, Hyun Woo and Kim, Dong Min, "Electrochemical Impedance Spectra of Dye-Sensitized Solar Cells: Fundamentals and Spreadsheet Calculation", International Journal of Photoenergy (2014)

[15] Ingmar Schoen and Peter Fromherz. "The Mechanism of Extracellular Stimulation of Nerve Cells on an Electrolyte-Oxide-Semiconductor Capacitor.", In: Biophysical Journal 92.3 (Feb. 2007), pp. 1096–1111.

[16] Aristizabal Botero William, H Salas Alvaro, and Janeth Gonzalez Colorado Silvia. "The Hodgkin-Huxley neuron model on the fast phase plane.", In: International Journal of Physical Sciences 8.20 (May 2013), pp. 1049–1057.

[17] C H Luo and Y Rudy. "A model of the ventricular cardiac action potential. Depolarization, repolarization, and their interaction.", In: Circulation Research 68.6 (June 1991), pp. 1501–1526.

[18] G. W. Beeler and H. Reuter. "Reconstruction of the action potential of ventricular myocardial fibres.", In: The Journal of Physiology 268.1 (June 1977), pp. 177–210

[19] Jürgen Rettinger, Silvia Schwarz, and Wolfgang Schwarz. Elektrophysiologie: Grundlagen - Methoden - Anwendungen. de. Lehrbuch. OCLC: 1048742447. Berlin, Germany: Springer Spektrum, 2018

[20] Dongchul C. Lee and Warren M. Grill. "Polarization of a Spherical Cell in a Nonuniform Extracellular Electric Field.", In: Annals of Biomedical Engineering 33.5 (May 2005), pp. 603–615.